Strut profiles with 6 mm slot

Strut profiles with 6 mm slot for light structures, such as supports and lab fixtures.

The 20x40 and 20x60 profiles are especially suitable for reinforcing; the 20x40x40 profile is suitable for constructing showcases, flow racks, and enclosures.

Slot, modular dimensions, central bore

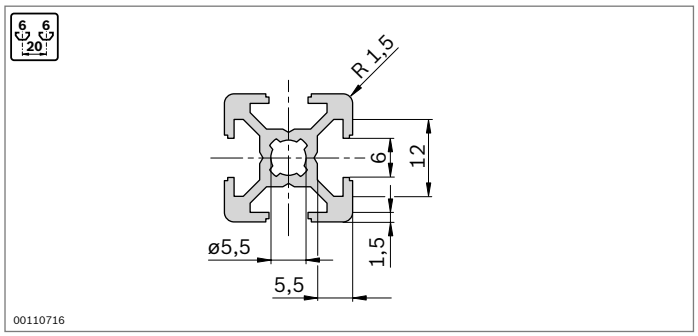

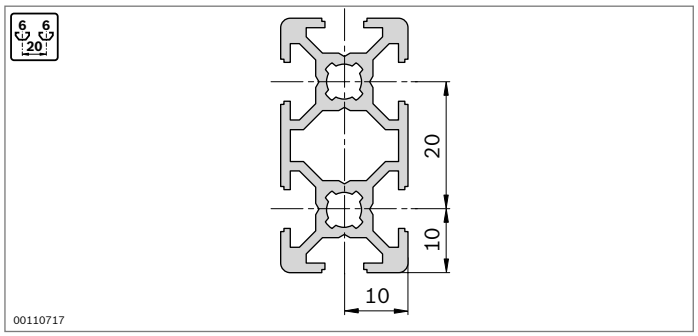

Profile finishing

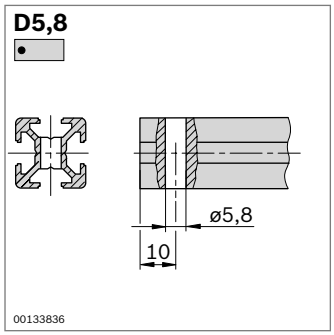

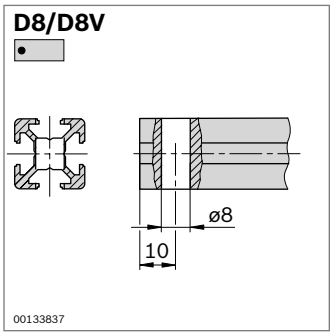

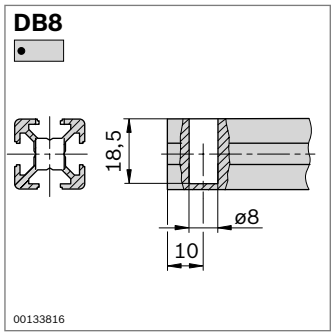

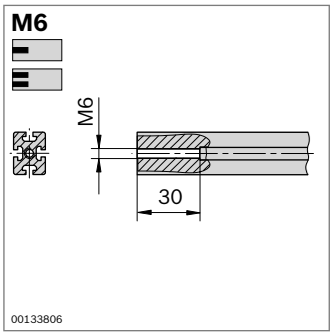

Minimum profile lengths (mm) for Quick & Easy standard profile finishes on one or both sides

	–	M6	D5.8	D8/DB8
–	50	50	50	50
M6	50	70	50	70
D5.8	50	50	50	50
D8/DB8	50	70	50	50

20x20 2NVS

A = 1,8 cm²
I_x = 0,7 cm⁴
I_y = 0,7 cm⁴
W_x = 0,7 cm³
W_y = 0,7 cm³
m = 0,5 kg/m

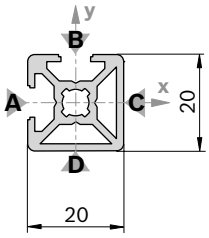

19171

Cap: see 20x20

20x20 2NVS		L (mm)	No.
1 pc		50 ... 3000	**3 842 992 924 / L**
20 pcs		3000	**3 842 519 658**

Quick & Easy (p. 2-8, see fold-out section)

20x20 2NVS	3 842 993 692/....
Length L (mm)	50 ... 3000
Standard profile finishes (note minimum length, p. 2-11)	M6 / D5.8 / D8 / DB8
Individual profile finishes (L_{max} = 2300 mm)	DI / DIS / MT / MTS / MI / MIS / DG[1)]

[1)] DG_{max} = 45°; L_{min1} / L_{min2} = 335 / 370 mm

20x20 3N

A = 1,7 cm²
I_x = 0,7 cm⁴
I_y = 0,8 cm⁴
W_x = 0,7 cm³
W_y = 0,7 cm³
m = 0,5 kg/m

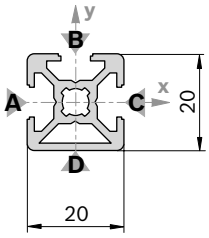

19172

Cap: See 20x20

20x20 3N		L (mm)	No.
1 pc		50 ... 3000	**3 842 992 889 / L**
20 pcs		3000	**3 842 517 180**

Quick & Easy (p. 2-8, see fold-out section)

20x20 3N	3 842 993 693/...
Length L (mm)	50 ... 3000
Standard profile finishes (note minimum length, p. 2-11)	M6 / D5.8 / D8 / DB8
Individual profile finishes (L_{max} = 2300 mm)	DI / DIS / MT / MTS / MI / MIS / DG[1)]

[1)] DG_{max} = 45°; L_{min1} / L_{min2} = 335 / 370 mm

20x20 R

A = 1,6 cm²
I_x = 0,6 cm⁴
I_y = 0,6 cm⁴
W_x = 0,5 cm³
W_y = 0,5 cm³
m = 0,4 kg/m

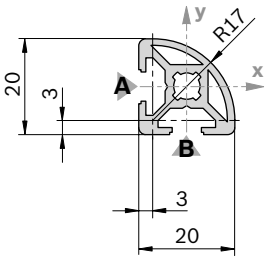

19173

Cap	Color	ESD		No.
20x20 R (1x)	Signal gray		20	**3 842 548 826**
20x20 R (1x)	Black		20	**3 842 548 827**
Material:	PP			

20x20 R		L (mm)	No.
1 pc		50 ... 3000	**3 842 992 890 / L**
20 pcs		3000	**3 842 517 183**

Quick & Easy (p. 2-8, see fold-out section)

20x20 R	3 842 993 695 / ....
Length L (mm)	50 ... 3000
Standard profile finishes (note minimum length, p. 2-11)	M6
Individual profile finishes (L_{max} = 2300 mm)	—