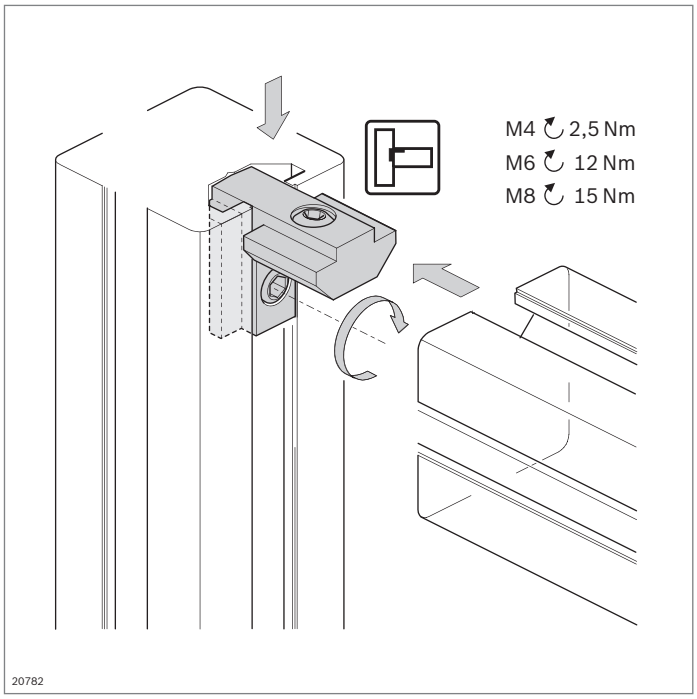

Inner bracket

- For elegant, easy-to-assemble profile connections
- Especially suitable for constructing door frames, protective grilles, or partition walls
- The inner bracket, 6 mm slot, can also be used as an inner bracket R, 6 mm slot
- Profile finishing: not required

Technical data (p. 19-8)

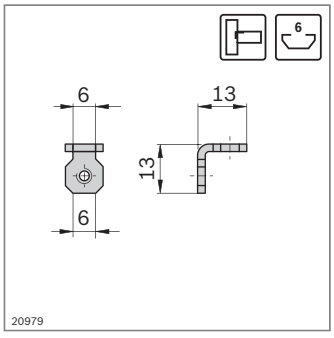

FS1

DIN 915
M4x6

Inner bracket	Slot	ESD		No.	FS
	6/6		10	**3 842 535 574**	2xFS1

Material: Sheet steel, galvanized
Fastening material: steel, galvanized, chromated transparent

Scope of delivery: Incl. fastening material (FS)

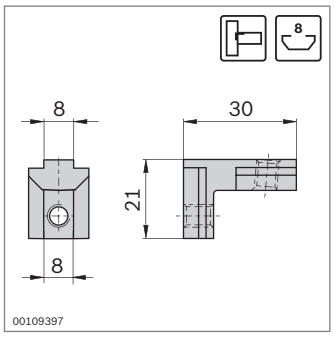

Slot	F_{max}	M_{max}
8/8	2200 N	50 Nm

FS2

DIN 913
M6x8

Inner bracket	Slot	ESD		No.	FS
	8/8		10	**3 842 535 578**	2xFS2

Material: Cast steel, galvanized, transparent passivated
Fastening material: steel, galvanized, chromated transparent

Scope of delivery: Incl. fastening material (FS)

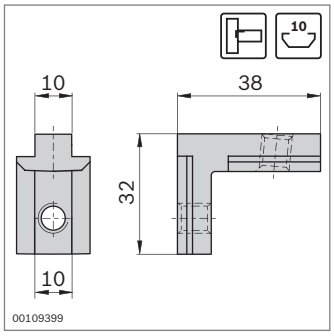

Slot	F_{max}	M_{max}
10/10	2800 N	100 Nm

FS3

DIN 913
M8x12

Inner bracket	Slot	ESD		No.	FS
	10/10		10	**3 842 535 572**	2xFS3

Material: Cast steel, galvanized, transparent passivated
Fastening material: steel, galvanized, chromated transparent

Scope of delivery: Incl. fastening material (FS)

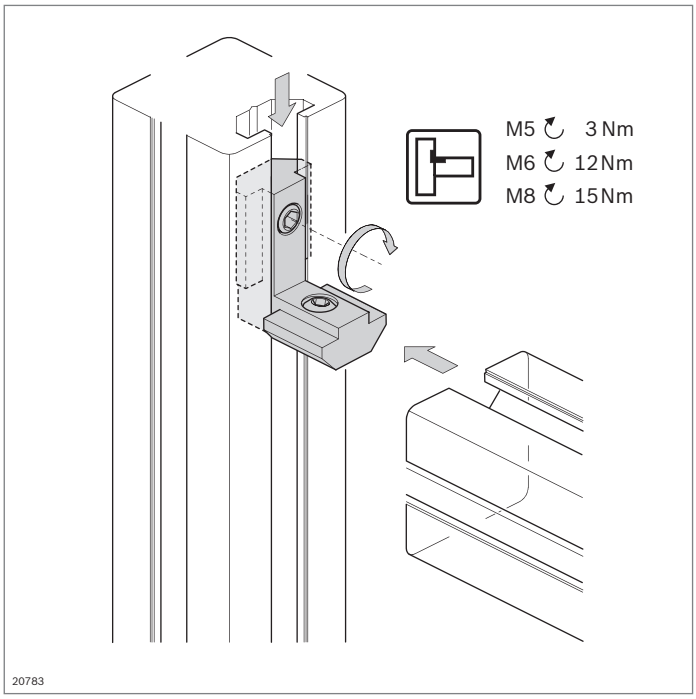

Inner bracket R

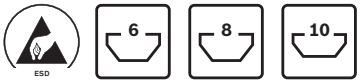

- For elegant, easy-to-assemble profile connections
- Especially suitable for constructing door frames, protective grilles, or partition walls
- Profile finishing: not required

Technical data (p. 19-8)

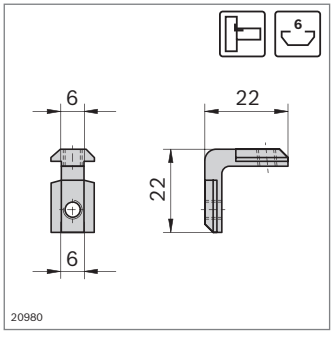

Slot	F_{max}	M_{max}
6/6	600 N	10 Nm

FS1
DIN 913
M5x5

Inner bracket R	Slot	ESD		No.	FS
	6/6		10	**3 842 535 575**	2xFS1

Material: Cast steel, galvanized, transparent passivated
Fastening material: steel, galvanized, chromated transparent

Scope of delivery: Incl. fastening material (FS)

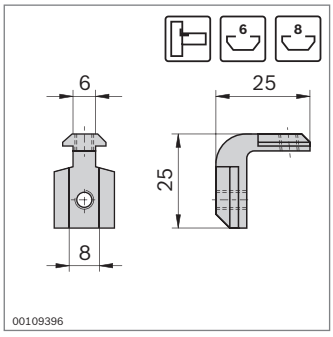

Slot	F_{max}	M_{max}
6/8	600 N	10 Nm

FS1
DIN 913
M5x5

Inner bracket R	Slot	ESD		No.	FS
	6/8		10	**3 842 535 573**	2xFS1

Material: Cast steel, galvanized, transparent passivated
Fastening material: steel, galvanized, chromated transparent

Scope of delivery: Incl. fastening material (FS)

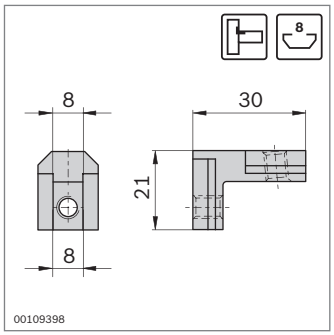

Slot	F_{max}	M_{max}
8/8	2500 N	50 Nm

FS2
DIN 913
M6x8

Inner bracket R	Slot	ESD		No.	FS
	8/8		10	**3 842 535 577**	2xFS2

Material: Cast steel, galvanized, transparent passivated
Fastening material: steel, galvanized, chromated transparent

Scope of delivery: Incl. fastening material (FS)

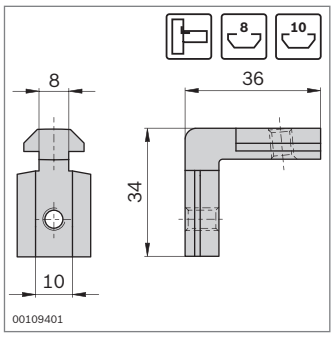

Slot	F_{max}	M_{max}
8/10	2500 N	50 Nm

FS2
DIN 913
M6x8

FS3
DIN 913
M6x12

Inner bracket R	Slot	ESD		No.	FS
	8/10		10	**3 842 535 576**	FS2, FS3

Material: Cast steel, galvanized, transparent passivated
Fastening material: steel, galvanized, chromated transparent

Scope of delivery: Incl. fastening material (FS)

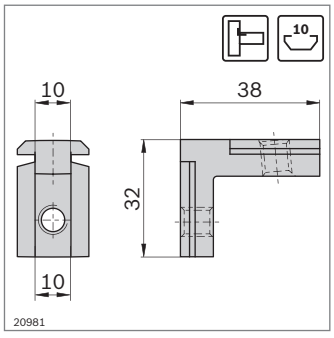

Slot	F_{max}	M_{max}
10/10	3000 N	100 Nm

FS4
DIN 913
M8x12

Inner bracket R	Slot	ESD		No.	FS
	10/10		10	**3 842 535 571**	2xFS4

Material: Cast steel, galvanized, transparent passivated
Fastening material: steel, galvanized, chromated transparent

Scope of delivery: Incl. fastening material (FS)